CURTAIN WALL 5200

Enerfrees Thermal Series 5200 – 50.8 mm (2”) systems can be applied to medium and low rise building setting including Structural Silicone Glazing or SSG.

- Stock lengths are standard 5486.4mm (18’) and custom stock lengths are available for supply
- Glazing is external
- 5200 series can accept single glass spandrel, double glass with overall thickness of 25.4mm (1”), and triple glass with an overall thickness of 44.45mm (1 $\frac{3}{4}$”)
- Designed with shear block hardware
- Standard shear block integration to plates for anchoring

Capped Option (Double Glazed)

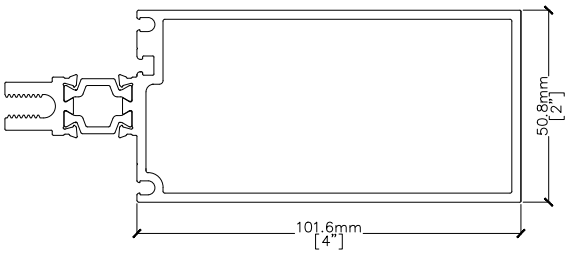

Structural Silicone Glazing

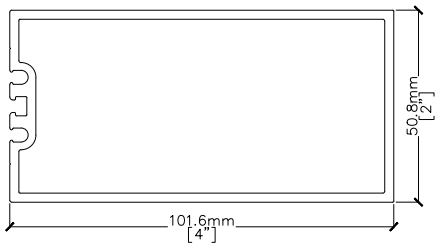

Capped Option (Triple Glazed)

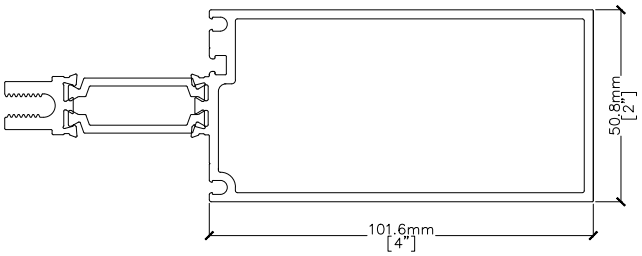

ENERFREES™
Window & Wall Systems

Manufacturer of High-performance Aluminum Systems
Address: 6 Denison St., Markham, Ontario, L3R 1B6
Tel: +1 905-604-5118
www.enerfrees.com info@enerfrees.com

V2025.04

5200 CURTAIN WALL (Double Glazed)

5200.20.20.0
SECTION 101.6mm (4")

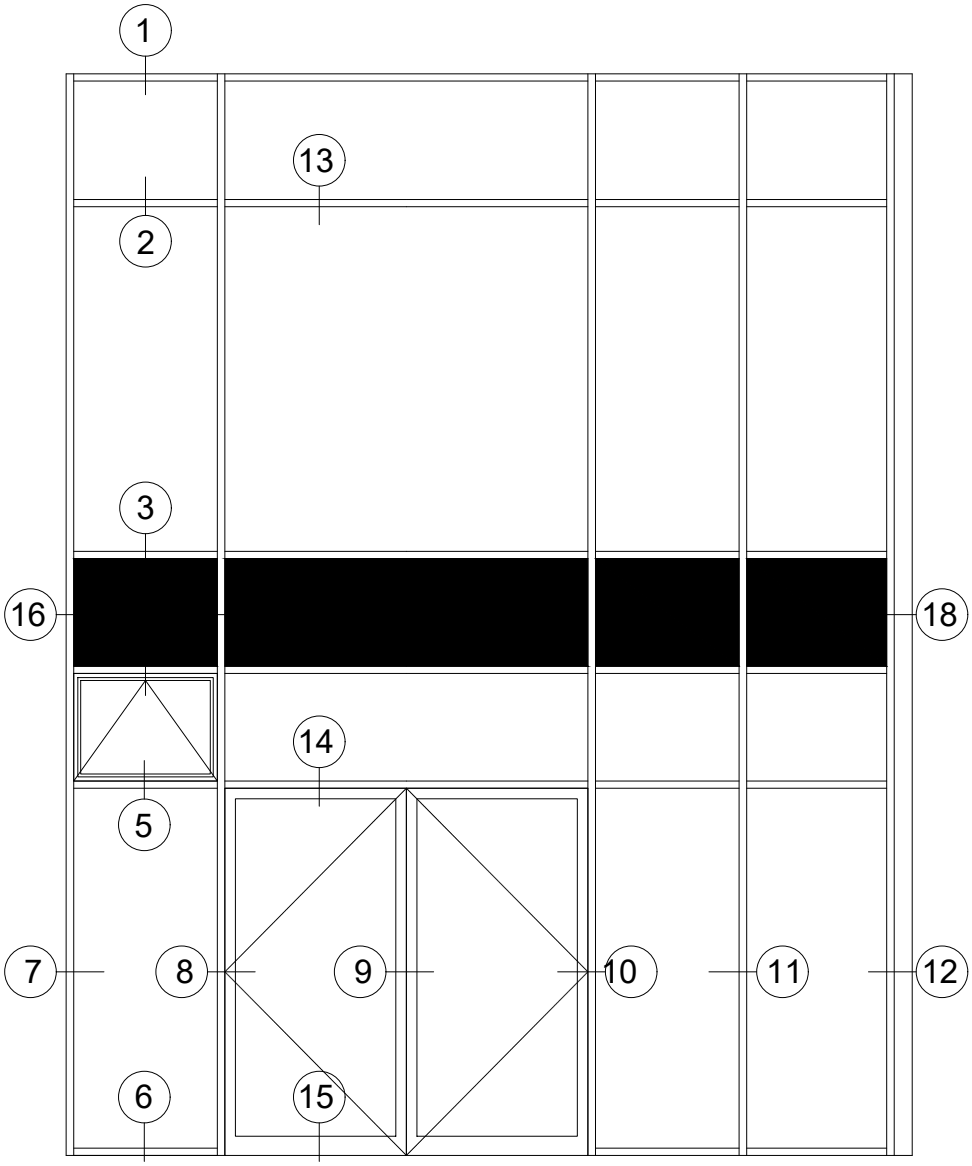

5200 Thermally Broken Curtain Wall (Double Glazed) is widely used framing profile series for residential, commercial, and industrial setting. It provides unlimited integration to standards or any custom size operable windows and/or doors.

EnerFrees™
Window & Wall Systems

Manufacturer of High-performance Aluminum Systems
Address: 6 Denison St., Markham, Ontario, L3R 1B6
Tel: +1 905-604-5118
www.enerfrees.com info@enerfrees.com

V2025.04

5200 CURTAIN WALL (Double Glazed)

5200.20.20.1
SECTION 101.6mm (4")

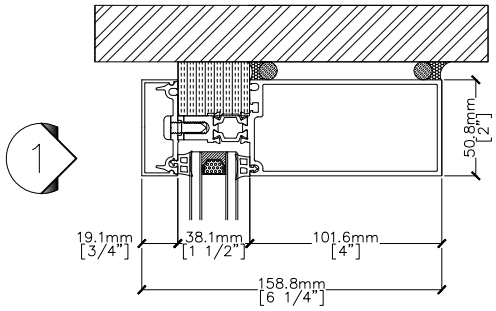

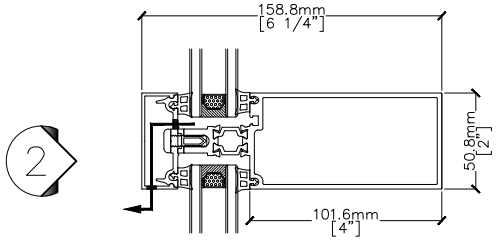

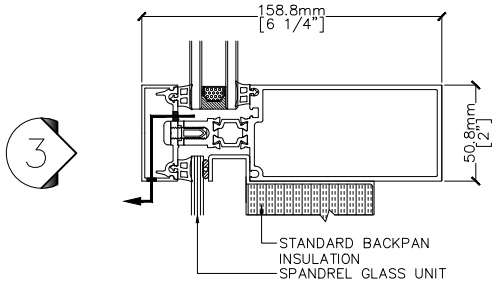

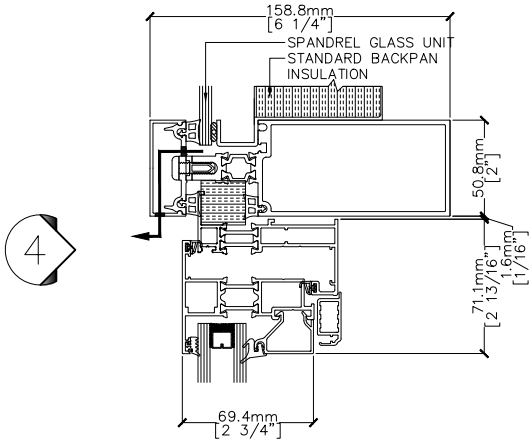

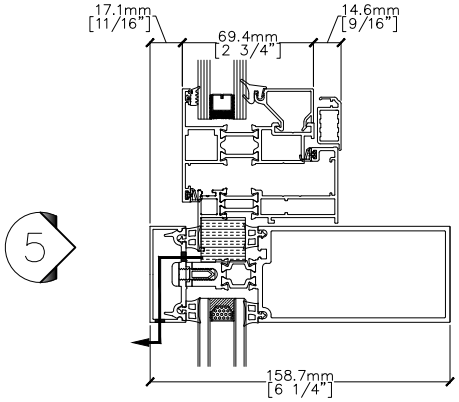

EnerFrees™
Window & Wall Systems

Manufacturer of High-performance Aluminum Systems
Address: 6 Denison St., Markham, Ontario, L3R 1B6
Tel: +1 905-604-5118
www.enerfrees.com info@enerfrees.com

5200 CURTAIN WALL (Double Glazed)

5200.20.20.2
SECTION 101.6mm (4")

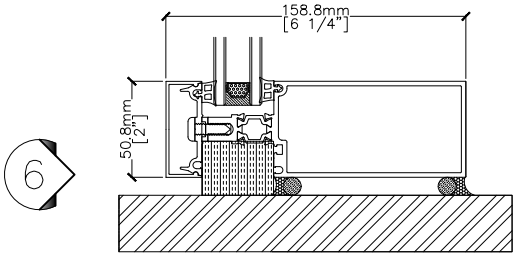

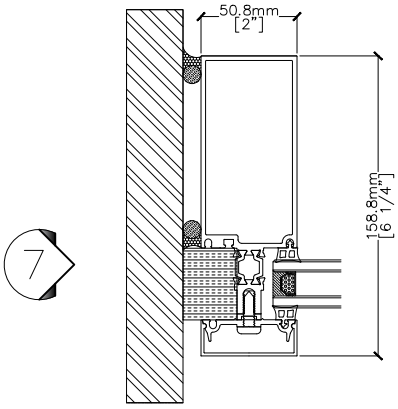

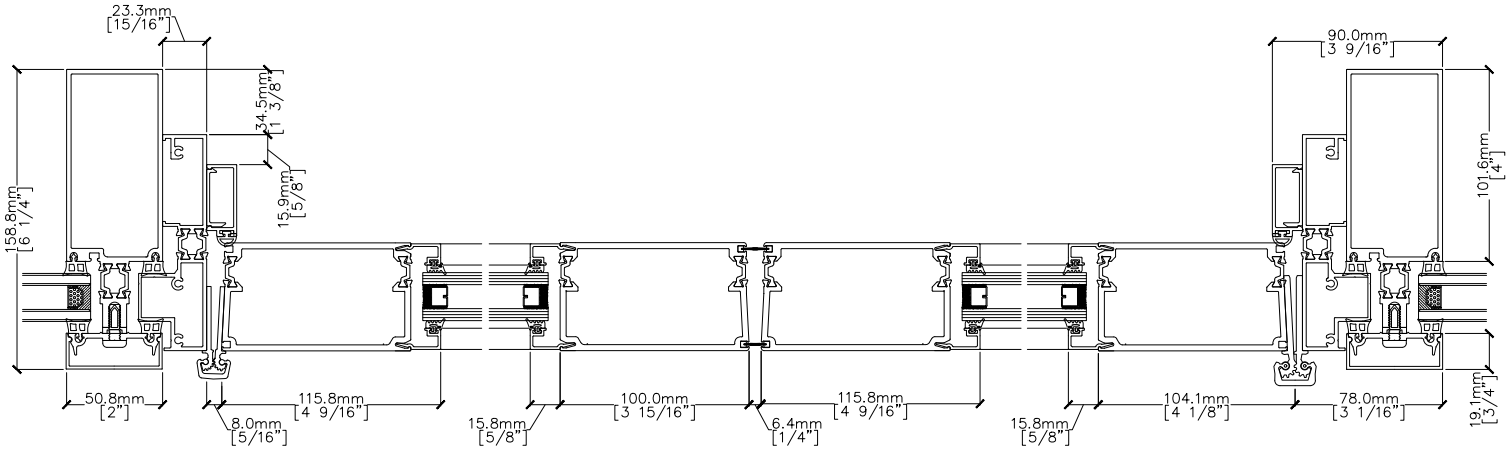

8 9 10

ENERFREES™
Window & Wall Systems

Manufacturer of High-performance Aluminum Systems
Address: 6 Denison St., Markham, Ontario, L3R 1B6
Tel: +1 905-604-5118
www.enerfrees.com info@enerfrees.com

5200 CURTAIN WALL (Double Glazed)

5200.20.20.3
SECTION 101.6mm (4")

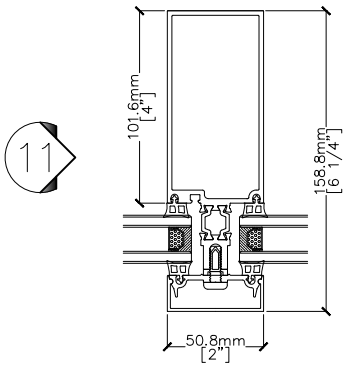

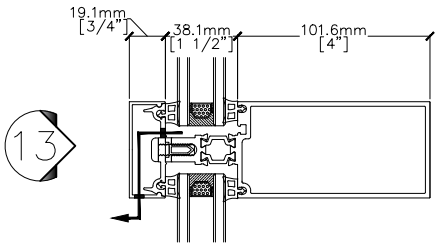

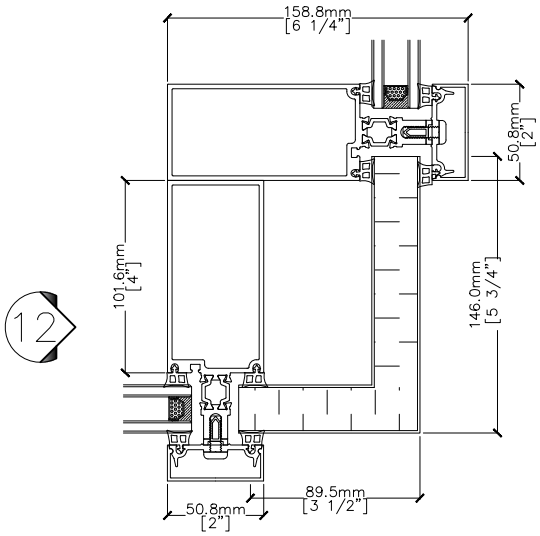

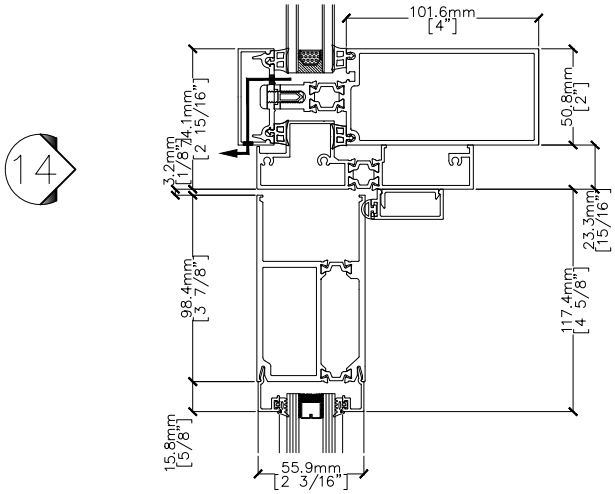

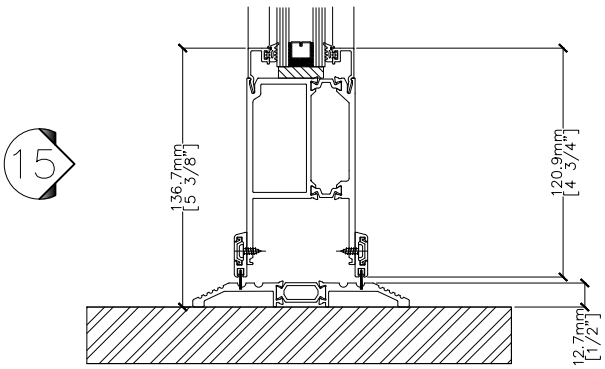

ENERFREES™
Window & Wall Systems

Manufacturer of High-performance Aluminum Systems
Address: 6 Denison St., Markham, Ontario, L3R 1B6
Tel: +1 905-604-5118
www.enerfrees.com info@enerfrees.com

5200 CURTAIN WALL (Double Glazed)

5200.20.20.4
SECTION 101.6mm (4")

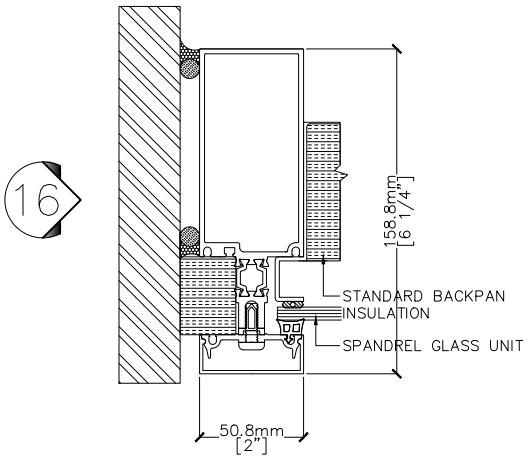

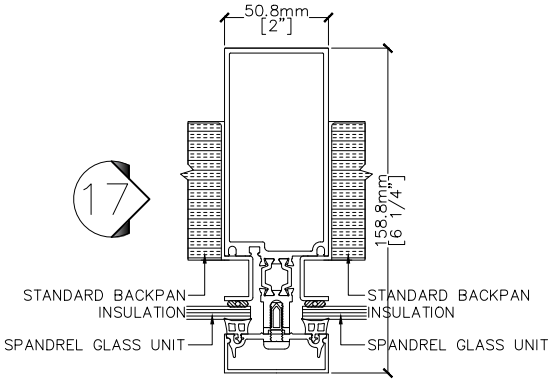

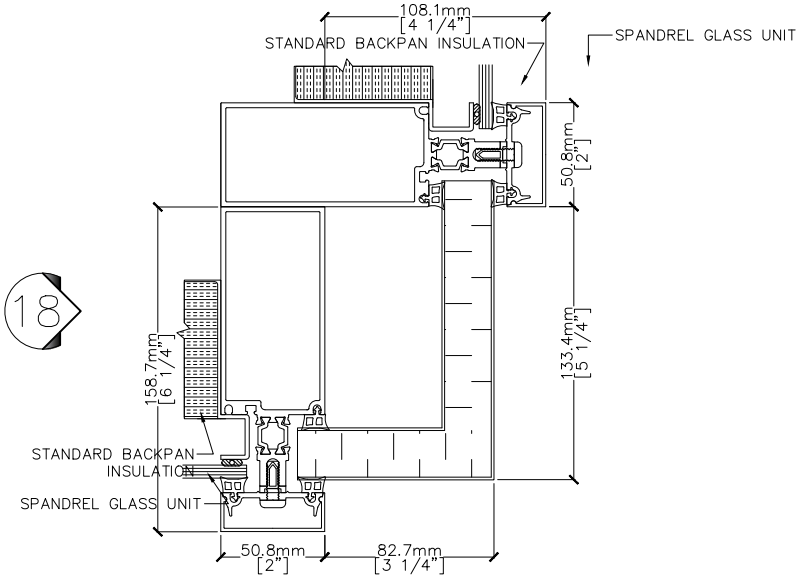

ENERFREES™
Window & Wall Systems

Manufacturer of High-performance Aluminum Systems
Address: 6 Denison St., Markham, Ontario, L3R 1B6
Tel: +1 905-604-5118
www.enerfrees.com info@enerfrees.com

5200 CURTAIN WALL (Triple Glazed)

5200.20.30.0
SECTION 101.6mm (4")

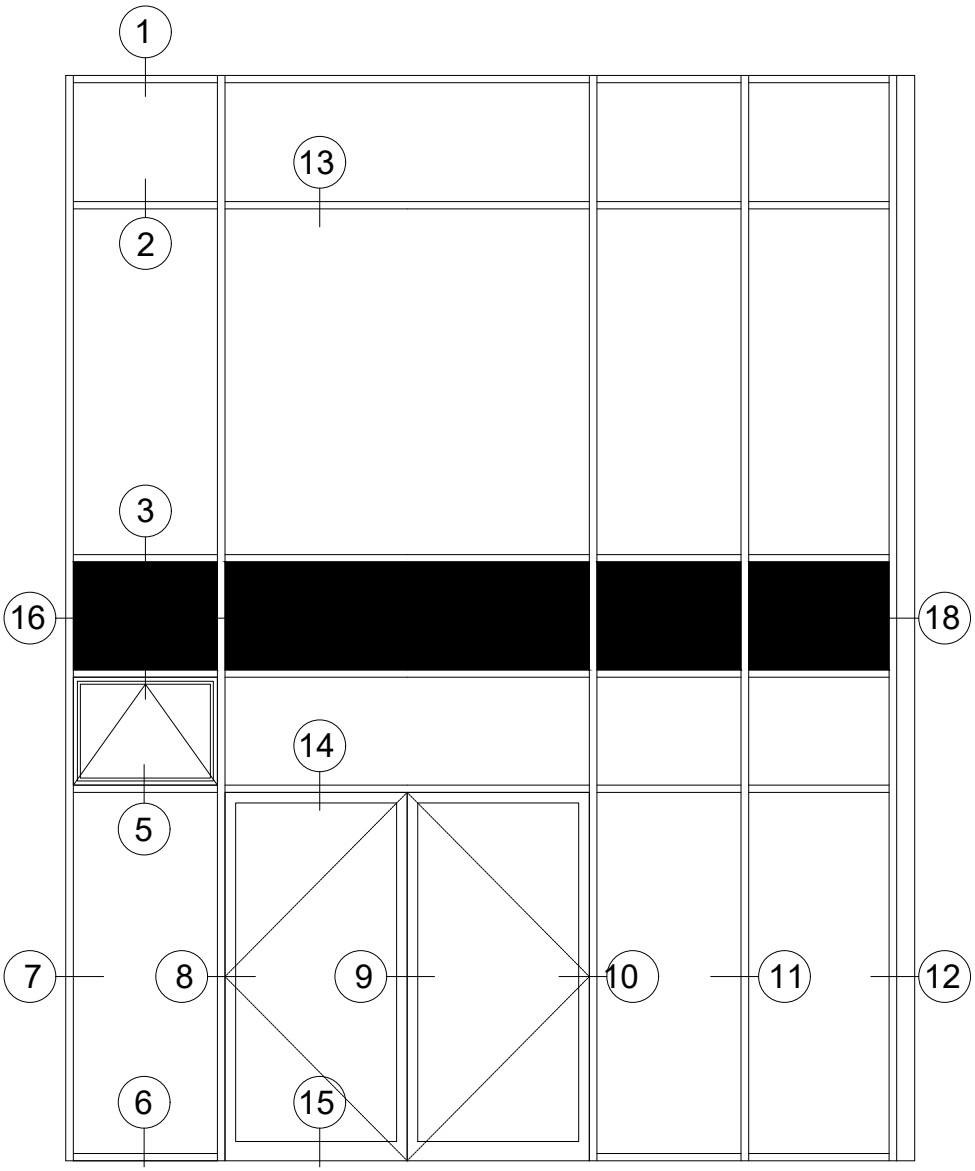

5250 Thermally Broken Curtain Wall (Triple Glazed) is widely used framing profile series for residential, commercial, and industrial setting with added resistance to weather. It provides unlimited option to standard or any custom size operable windows and/or doors.

EnerFrees™
Window & Wall Systems

Manufacturer of High-performance Aluminum Systems
Address: 6 Denison St., Markham, Ontario, L3R 1B6
Tel: +1 905-604-5118
www.enerfrees.com info@enerfrees.com

5200 CURTAIN WALL (Triple Glazed)

5200.20.30.2
SECTION 101.6mm (4")

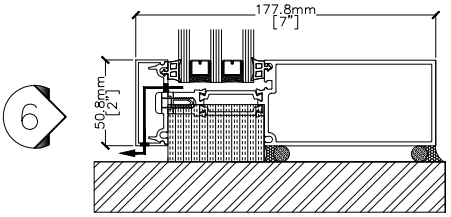

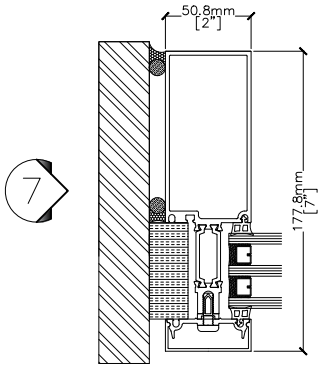

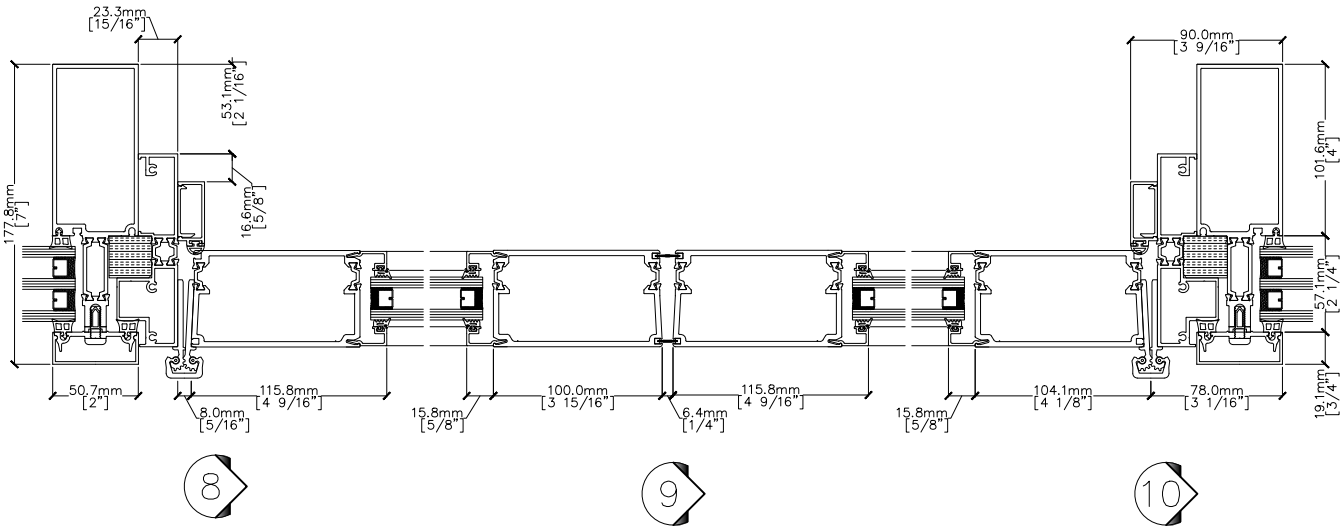

ENERFREES™
Window & Wall Systems

Manufacturer of High-performance Aluminum Systems
Address: 6 Denison St., Markham, Ontario, L3R 1B6
Tel: +1 905-604-5118
www.enerfrees.com info@enerfrees.com

5200 CURTAIN WALL (Triple Glazed)

5200.20.30.3
SECTION 101.6mm (4")

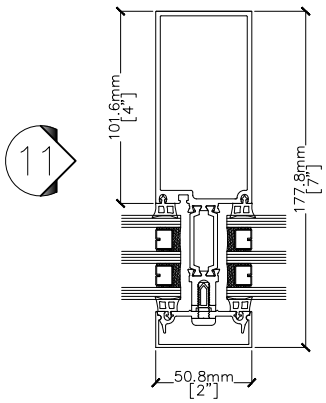

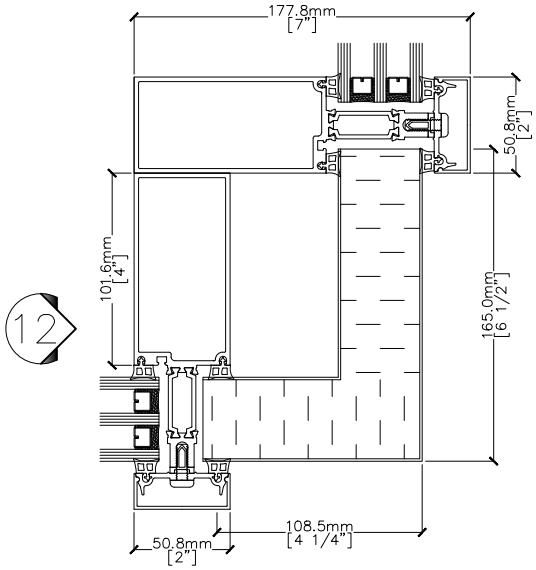

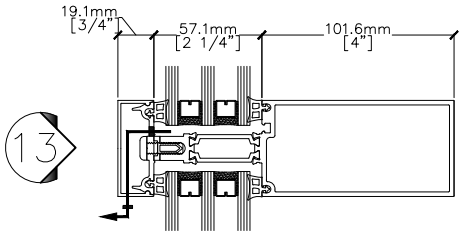

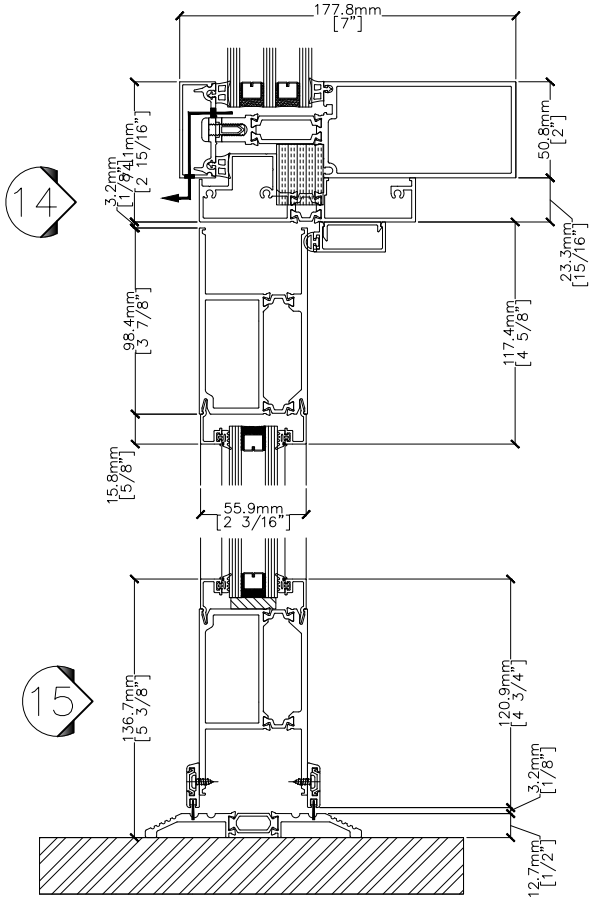

ENERFREES™
Window & Wall Systems

Manufacturer of High-performance Aluminum Systems
Address: 6 Denison St., Markham, Ontario, L3R 1B6
Tel: +1 905-604-5118
www.enerfrees.com info@enerfrees.com

5200 CURTAIN WALL (Triple Glazed)

5200.20.30.4
SECTION 101.6mm (4")

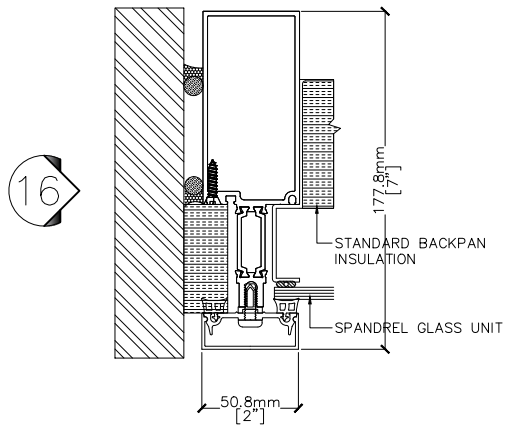

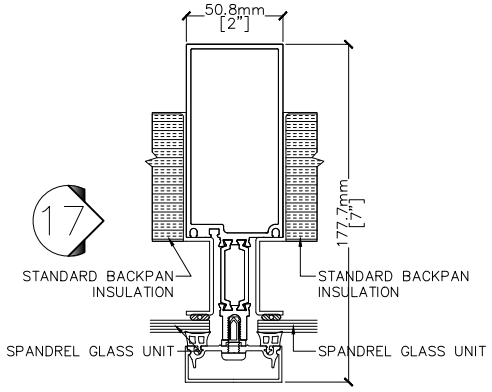

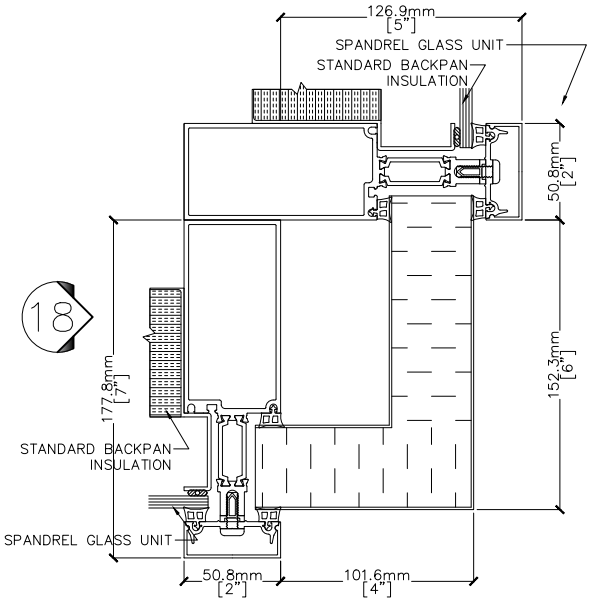

ENERFREES™
Window & Wall Systems

Manufacturer of High-performance Aluminum Systems
Address: 6 Denison St., Markham, Ontario, L3R 1B6
Tel: +1 905-604-5118
www.enerfrees.com info@enerfrees.com

5200 CURTAIN WALL(SSG)

5200.4.2
WIND LOAD CHART

A = 20 PSF
B = 25 PSF
C = 30 PSF
D = 35 PSF
E = 40 PSF
F = 50 PSF
G = 60 PSF

$Ix = 2.7703\ in^4$
$Sx = 1.2498\ in^3$

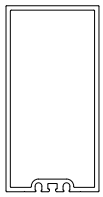

520007
2" x 4" (50.8mm x 101.6mm)
SSG Horizontal or Mullion

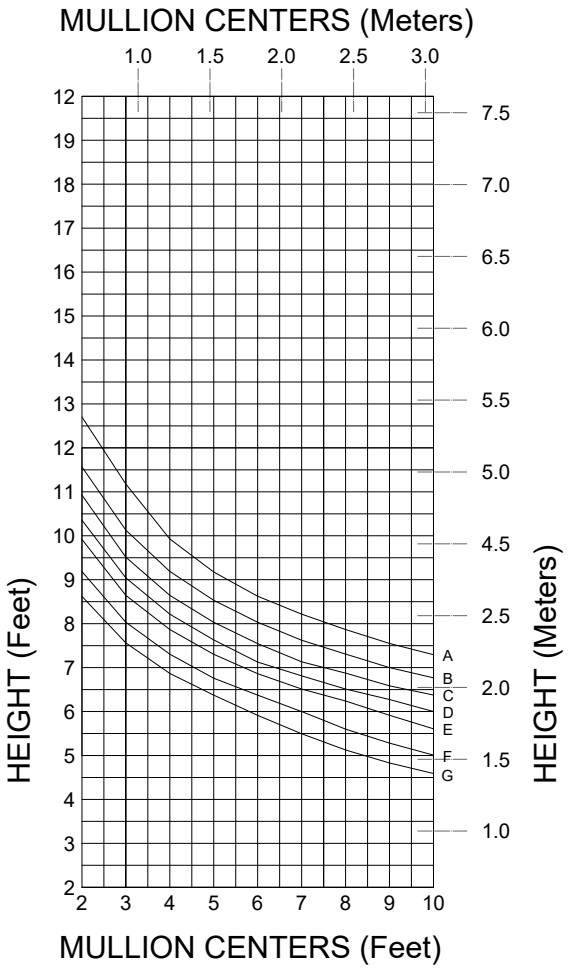

ENERFREES™
Window & Wall Systems

Manufacturer of High-performance Aluminum Systems
Address: 6 Denison St., Markham, Ontario, L3R 1B6
Tel: +1 905-604-5118
www.enerfrees.com info@enerfrees.com

5200 CURTAIN WALL(Double Glazed)

5200.4.5
WIND LOAD CHART

A = 20 PSF
B = 25 PSF
C = 30 PSF
D = 35 PSF
E = 40 PSF
F = 50 PSF
G = 60 PSF

$Ix = 4.7508\ in^4$
$Sx = 1.6783\ in^3$

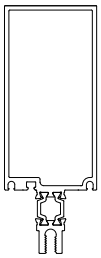

520022
2" x 4" (63.5mm x 101.6mm)
Double Glazed Horizontal or Mullion

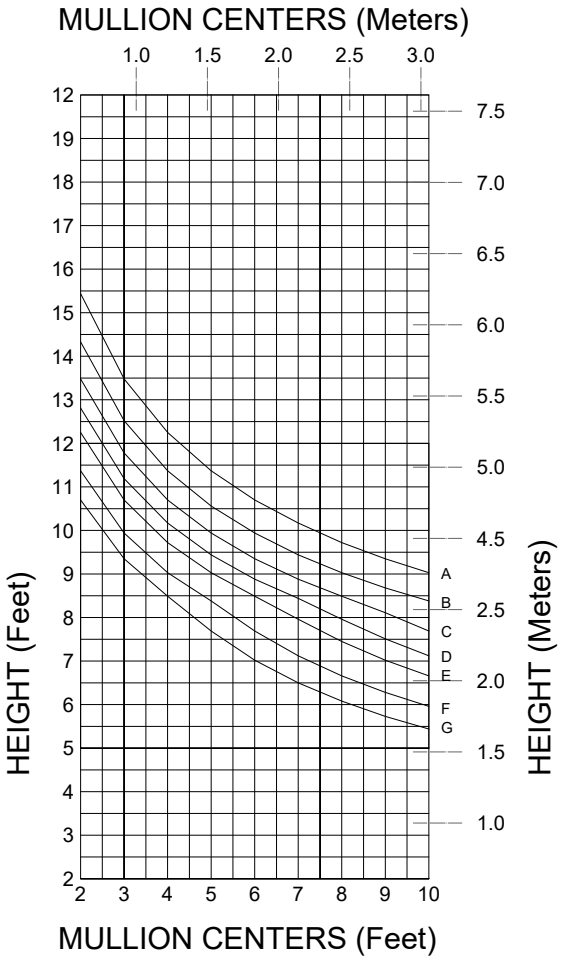

ENERFREES™
Window & Wall Systems

Manufacturer of High-performance Aluminum Systems
Address: 6 Denison St., Markham, Ontario, L3R 1B6
Tel: +1 905-604-5118
www.enerfrees.com info@enerfrees.com

5200 CURTAIN WALL(Triple Glazed)

5200.4.8
WIND LOAD CHART

A = 20 PSF
B = 25 PSF
C = 30 PSF
D = 35 PSF
E = 40 PSF
F = 50 PSF
G = 60 PSF

$Ix = 6.3027\ in^4$
$Sx = 2.0213\ in^3$

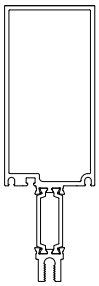

520032
2 " x 4" (63.5mm x 101.6mm)
Triple Glazed Horizontal or Mullion

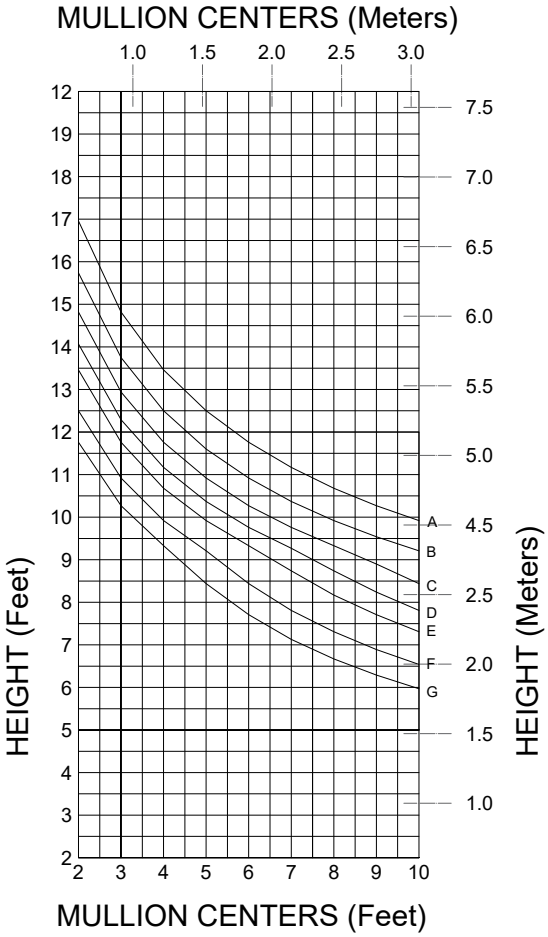

ENERFREES™
Window & Wall Systems

Manufacturer of High-performance Aluminum Systems
Address: 6 Denison St., Markham, Ontario, L3R 1B6
Tel: +1 905-604-5118
www.enerfrees.com info@enerfrees.com

5200 CURTAIN WALL

5200.5.1
U-FACTOR TABLE (Double Glazed)

1. The overall product U-factors are determined in according with NFRC 100-2010.
2. The Center-of-Glazing U-factors are determined by the insulated glass unit (IGU) and should be obtained from the glass supplier.
3. The simulated specimen size is based on NFRC 100-2010 Table 4-3 Product Type Curtain Wall, which is 2000mm (78 ¾”) width by 2000mm (78 ¾”) height (½ height of head and sill, ½ width of the vertical mullion). See below:

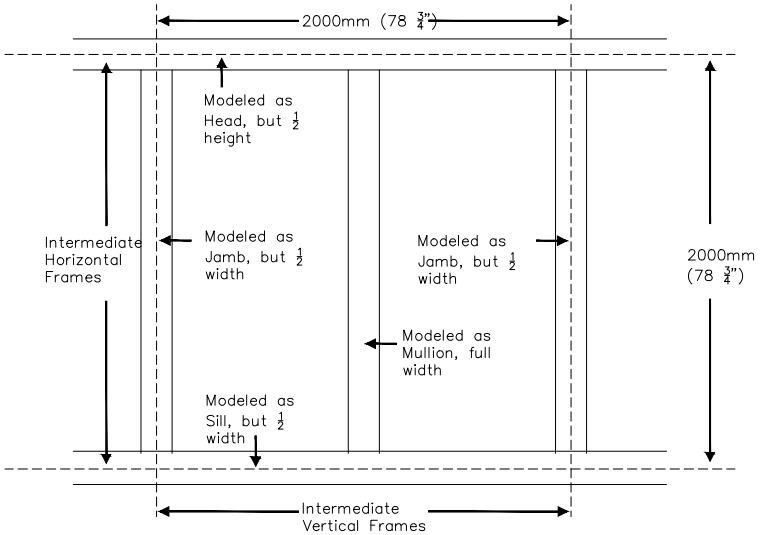

DOUBLE GLAZED

METRIC UNIT

Center-of-Glazing U-factor (W/m2-K)	Non-metal Spacer	Aluminum Spacer
	Product U-factor (W/m2-K)	Product U-factor (W/m2-K)
1.00	1.37	1.62
1.10	1.46	1.70
1.20	1.55	1.79
1.30	1.64	1.87
1.40	1.72	1.96
1.50	1.81	2.04
1.60	1.90	2.12
1.70	1.99	2.21
1.80	2.07	2.29
1.90	2.16	2.38
2.00	2.25	2.46
2.10	2.34	2.55
2.20	2.43	2.63
2.30	2.51	2.71
2.40	2.60	2.80
2.50	2.69	2.88

IMPERIAL UNIT

Center-of-Glazing U-factor (Btu/h-ft2-F)	Non-metal Spacer	Aluminum Spacer
	Product U-factor (Btu/h-ft2-F)	Product U-factor (Btu/h-ft2-F)
0.18	0.24	0.29
0.20	0.26	0.31
0.22	0.28	0.32
0.24	0.30	0.34
0.26	0.32	0.36
0.28	0.33	0.37
0.30	0.35	0.39
0.32	0.37	0.41
0.34	0.39	0.42
0.36	0.40	0.44
0.38	0.42	0.46
0.40	0.44	0.47
0.42	0.46	0.49
0.44	0.47	0.51

ENERFREES™
Window & Wall Systems
Manufacturer of High-performance Aluminum Systems
Address: 6 Denison St., Markham, Ontario, L3R 1B6
Tel: +1 905-604-5118
www.enerfrees.com info@enerfrees.com

5200 CURTAIN WALL

5200.5.2
U-FACTOR TABLE (Triple Glazed)

1. The overall product U-factors are determined in according with NFRC 100-2010.
2. The Center-of-Glazing U-factors are determined by the insulated glass unit (IGU) and should be obtained from the glass supplier.
3. The simulated specimen size is based on NFRC 100-2010 Table 4-3 Product Type Curtain Wall, which is 2000mm (78 ¾”) width by 2000mm (78 ¾”) height (½ height of head and sill, ½ width of the vertical mullion). See below:

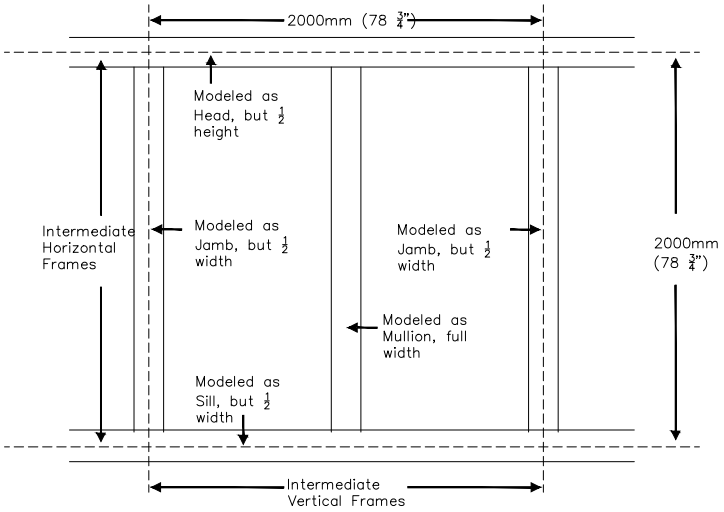

TRIPLE GLAZED

METRIC UNIT

Center-of-Glazing U-factor (W/m2-K)	Non-metal Spacer	Aluminum Spacer
	Product U-factor (W/m2-K)	Product U-factor (W/m2-K)
0.50	0.76	1.05
0.60	0.85	1.13
0.70	0.94	1.22
0.80	1.03	1.30
0.90	1.12	1.39
1.00	1.22	1.48
1.10	1.31	1.57
1.20	1.39	1.65
1.30	1.48	1.74
1.40	1.57	1.83
1.50	1.66	1.91
1.60	1.75	2.00
1.70	1.84	2.09

IMPERIAL UNIT

Center-of-Glazing U-factor (W/m2-K)	Non-metal Spacer	Aluminum Spacer
	Product U-factor (W/m2-K)	Product U-factor (W/m2-K)
0.10	0.14	0.19
0.12	0.16	0.21
0.14	0.18	0.23
0.16	0.20	0.25
0.18	0.22	0.26
0.20	0.24	0.28
0.22	0.25	0.30
0.24	0.27	0.32
0.26	0.29	0.33
0.28	0.31	0.35
0.30	0.32	0.37

Manufacturer of High-performance Aluminum Systems
Address: 6 Denison St., Markham, Ontario, L3R 1B6
Tel: +1 905-604-5118
www.enerfrees.com info@enerfrees.com